DAMAR®

DWP-20LED/5K LED WALL PACK

FEATURES AND SPECIFICATIONS

Overall Height: 5.55 in. (141.0mm)
Width: 4.96 in. (126.0mm)
Weight: 2.4 lbs. (1.0886 kg.)
Die Cast Aluminum Housing
Gasketed Glass Lens
Low Maintenance
Wet Location Rated
ETL Listed
DLC Multiple Listing
Limited Warranty: This fixture is warranted to be free of defects in materials and workmanship for a period of (5) years from the date of the original purchase

DIMENSIONS

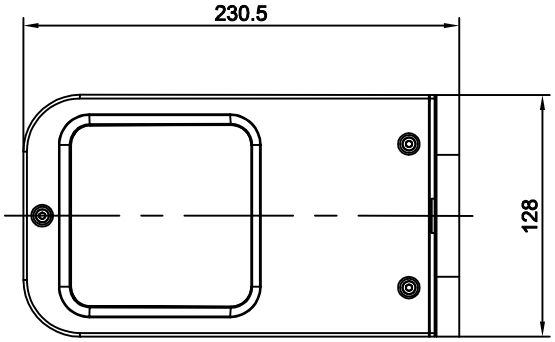

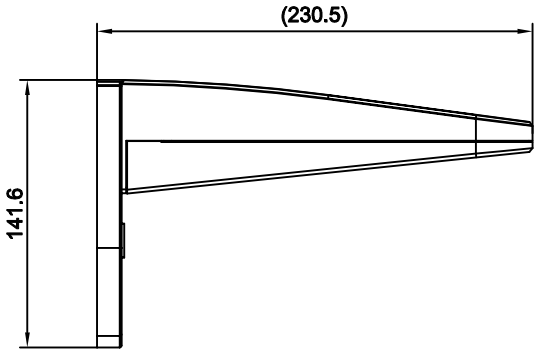

PHOTOMETRICS

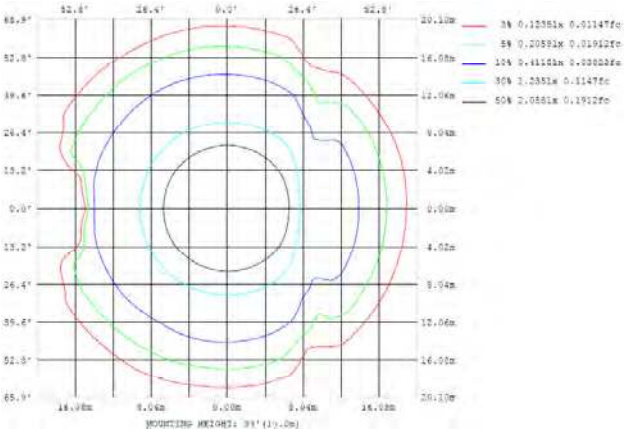

Chart3: IlluminancePlot(Footcandles)

MOUNTING DETAILS

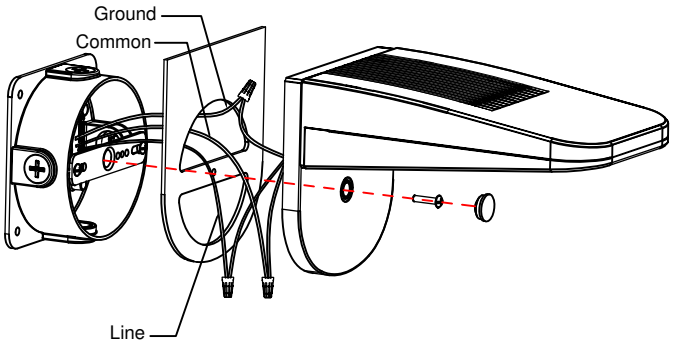

All units may operate at 120V to 240V, 50 or 60Hz.

1. Connect the black fixture lead to the (+) LINE supply lead.
2. Connect the white fixture lead to the (-) COMMON supply lead.
3. Connect the bare copper Ground wire from fixture to supply ground.

www.damarww.com

38660B **DESCRIPTION**

Wattage: 20 W
CCT: 5000K
CRI : 80
Avg Life Hrs: 50,000
Avg Lumens: 1400
Voltage: 120-277V
Hertz: 50/60 Hz

DAMAR®
805 N Carnation
Aurora, MO 65605

3 YEAR LIMITED WARRANTY